Pos.	Description	Pos.	Description	Pos.	Description
1	Hexagon bolt	31	Bearing	61	Socket
2	Spring washer	32	Screw	62	Holding fixture
3	Flat washer	33	Gear case	63	Handle switch down switch
4	Fixing ring	34	Spring washer	64	Condenser
5	Support structure	35	Flat washer	65	Handle switch up switch
6	Support board	36	2# gear wheel	66	Rise and downswitch
7	Locating shaft	37	Cushion board	67	Three-prong plug
8	Gear shaft	38	Front cover	68	Hook locknut
9	Flat washer	39	Bearing	69	Hook washer
10	Gear(A)	40	Stator	70	Hexagon bolt
11	Gear(B)	41	Stator shell	71	Hexagon bolt
12	Crossed slot round bolt	42	Rotor	72	Pulley
13	Jiggle switch	43	Tripping spring	73	Splint
14	Paper washer	44	Brake component	74	Pulley
15	Limited switch plate	45	After closure	75	Locknut
16	Flat washer	46	Fan blade	76	1# gear wheel
17	Spring washer	47	Cover fan	77	Flat key
18	Nut	48	Spring washer	78	Gear shaft
19	Cover	49	Flat washer	79	Bearing
20	Crossed slot round bolt	50	Hexagon bolt	80	Screw
21	Washer(1)	51	Junction box	81	Limitr
22	Washer(2)	52	Terminal	82	Hook
23	Limited pin	53	Cover	83	Rope thimble
24	Driven gear	54	Holding fixture	84	Wire rope
25	Initiative gear	55	Holding fixture	85	Block
26	Round pin	56	Safety switch	86	Aluminum pipe
27	Drum shaft	57	Breaker contactor	87	Rope drum
28	Flat key	58	Locating pin	88	Wedge
29	Flat key	59	Spring tab	89	Bushing
30	Elastic collar	60	Cable	90	

Titansuhe

OPERATION MANUAL

MICRO ELECTRIC WIRE ROPE HOIST

Note: Operator MUST read and understand this operating manual before use this hand pallet truck.



PA200 PA600
PA250 PA700
PA300 PA800
PA400 PA1000
PA500 PA1200

RoHS COMPLIANT 2002/95/EC

CHONGQING TITAN SUHE TECH CO., LTD

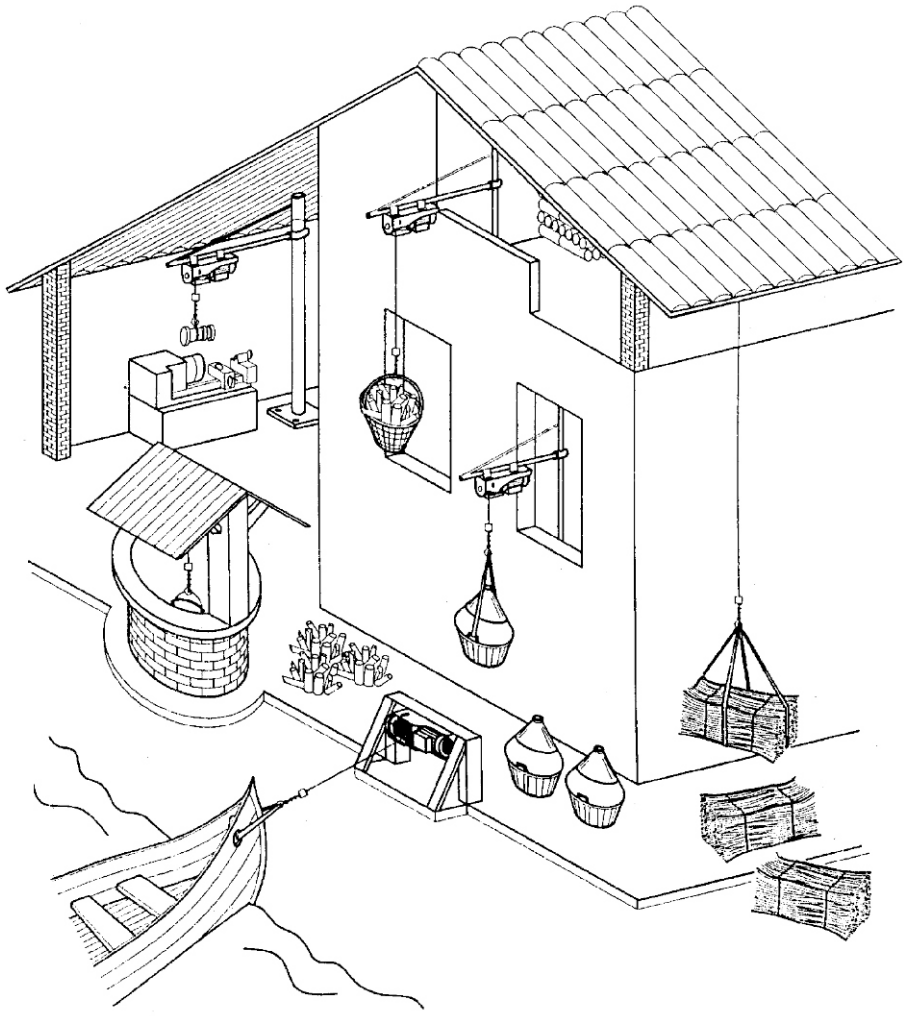

ELECTRIC HOIST

WARNING! Before using this electric tool, read the general safety rules listed below carefully. Failure to do so could result in injury or equipment damage.

Congratulations on your excellent choice. Your new electric tool is manufactured in compliance with the best reliability and quality standards, ensuring you efficiency and safety for a long period of time.

1 GENERAL SAFETY RULES

- Electrical safety
  Wall outlets must meet safety standards. In case of any doubt, wall outlets should be checked by a qualified electrician to ensure they are suitable.
  The plug must be securely grounded and your electrical system must be supplied with a magnetic cut-out safety switch.
  Do not pull on the electric cable to disconnect the plug.
- The machine should only be operated by specially trained persons with a thorough knowledge of the safety rules and regulations.
- When the machine is idling, make sure it is our of the reach of children.
- The machine should be protected from frost and low temperatures.
- If the machine is unable to hoist a load, do not continue pressing the hoisting button; this means that the load exceeds the machine's maximum capacity.
- Do not overload! Do not use 2 or more electric hoists to lift one item.
- Do not lift heavy items aslant; do not use the electric hoist to drag items along the ground.
- Do not lift stationary items.
- Do not attempt to dismantle the machine while it is running or while it is connected to the power supply.
- The machine should not be operated during rain or storm.
- For indoor use only! DO NOT USE OUTDOORS.
- Never hoist persons.
- Do not stand under hoisted loads.
- Before beginning to operate the machine, ensure that the steel cable is correctly wound on the spool and the pitch is equal to the cable diameter.
- Leave at least 3 compete windings of cable on the hoist, to avoid damage to the cable fixation.
- Avoid winding over 16mm of cable on the hoist.
- Press button before loading, eliminate any slack in the steel rope, then lift the load.

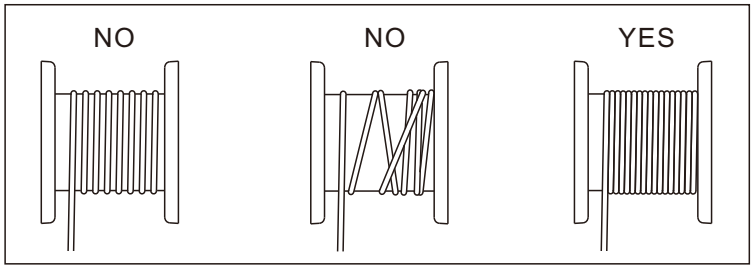

- Please respect the maximum load indicated on the sticker. Disregard the capacity indicated on the hook.
- Do not leave heavy items suspended for too long in order to avoid permanent strain on parts and to prevent accidents.

When the steel cable has become worn, replace it only with a cable of the same specifications manufactured by us. Our cables can be found at all authorized service outlets.

Before operating the machine, check that switches are in good operating condition.

Attention: the motor has no cut-off function. Do not use it for overloads. If the machine is unable to lift an item, do not attempt to force it. Switch the motor off to allow it to cool, reduce the load, and lift again.

- Position-limit Safety Device:

The position-limit device is designed to prevent capacity limits being exceeded when lifting or lowering a load.

Do not use it as a travel switch and never dismantle.

- Hoist Brake System:

The hoist brake system is factory-adjusted to work within the rated load conditions. After long use, rubber in the brake system will become worn and the brake will not longer work as it should. If you feel that your hoist can no longer lift the load for which it is intended, please contact with your dealer to replace the friction plate.

The electric hoist features up and down limit-position safety devices, When a load is hoisted to the limited-position level, the machine will stop lifting. Conversely, if the downward movement is too fast, the safety switch will be triggered and the machine will stop working. The down safety switch is installed on the side of machine. There must be at least 2 turns of wire rope on the spool when the down safety switch triggers. Otherwise, it is out of adjustment and you should have it reset at your local dealer.

Please ensure that you check all easily-wearing parts as mentioned above every 6 months to ensure the safety of the operator and the machine.

2 INSTALLATION

The hoist “standard version” is fitted with a specially-designed bracket system that enables it to be bolted to a round, square or rectangular shaped support.

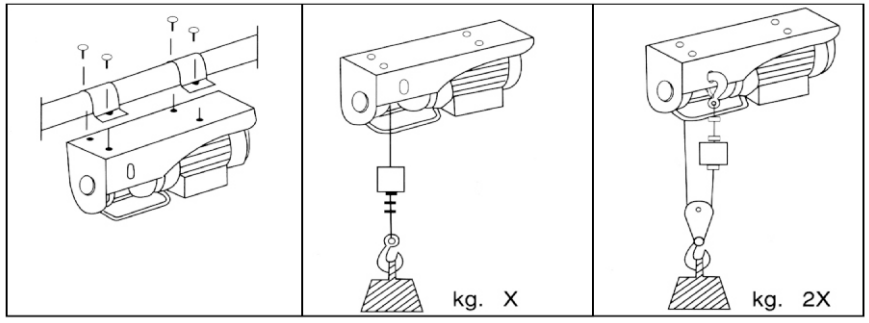

First ensure that outlet specifications (volt-hertz) correspond to those indicated on the machine plate, and then insert the plug. If a cable extension is required, it is utmost importance to comply with the specifications given in the tables.

EXTENSION LENGTH	CABLE SECTION
Up to 20m	1.5mm
From 20m to 50m	2.5mm

3 MAINTENANCE

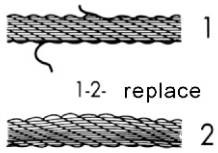

- Periodically CHECK that the steel cable is in good condition.
- CHECK that the screws securing the brackets and reduction gear are firmly tightened.
- CHECK THE CONDITION AND TIGHTNESS OF THE NUTS securing the steel cable clamps.

Periodically CHECK that the motor cut-off switch and push button switch are in good working condition.

Please check extent of wear and tear on the hoist and perform regular maintenance. Check normally once a year.

Ensure that all moving parts are adequately greased or oiled: e.g. the hook, drum shaft, gearbox and shaft etc.

Do not grease the cable!!

Note: Abrasion of the hook; Check abrasion of the hook at each maintenance; if the war/abrasion exceeds 10% of the original size, replace the hook with a new one.

4 WARRANTY

This product is warranted in accordance with legal regulations for a 24-month period effective from the date of purchase by the first user.

This warranty covers all material or production defects. It does not extend to: defects from normal wearing parts such as bearings, brushes, cables, plugs or accessories like drills, drill bits, saw blades etc.; damage or defects resulting from misuse, accidents or alterations; transportation costs.

We reverse the right to reject any claim where the purchase cannot be verified or when it is clear that the product was not properly maintained. (Clean ventilation slots, service carbon brushes regularly).

Your purchase receipt must be kept as proof of date of purchase.

Your un-dismantled tool must be returned to your dealer in an acceptable clean state, in its original blow-moulded case if relevant to unit, accompanied by your proof of purchase.

5 ENVIRONMENT



Should your machine need replacement after extended use, do not put ir in the domestic waste but dispose of it in an environmentally safe way.

Waste electrical products should not be disposed of with household waste. Please recycle where facilities exist. Check with your local Authority or retailer for recycling advice.

6 TECHNICAL DATA

Model:	HGS-B-200 PA200		HGS-B-250 PA250		HGS-B-300 PA300		HGS-B-400 PA400	
	Standard version	version with double load cap.	Standard version	version with double load cap.	Standard version	version with double load cap.	Standard version	version with double load cap.
Load Capacity	100kg	200kg	125kg	250kg	150kg	300kg	200kg	400kg
Lifting height	12m	6m	12m	6m	12m	6m	12m	6m
Lifting speed	10m/min	5m/min	10m/min	5m/min	10m/min	5m/min	10m/min	5m/min
Cable length	12.5m		12.5m		12.5m		12.5m	
Cable diameter	3mm		3mm		3mm		3.8mm	
Cable break resistance	⩾800kg		⩾800kg		⩾800kg		⩾1100kg	
Service	S_3 20%-10min		S_3 20%-10min		S_3 20%-10min		S_3 20%-10min	
Main voltage	230V~50Hz		230V~50Hz		230V~50Hz		230V~50Hz	
Motor performance	P_1 480W		P_1 540W		P_1 600W		P_1 950W	

Model:	HGS-B-500 PA500		HGS-B-600 PA600		HGS-B-700 PA700		HGS-B-800 PA800		HGS-B-990 PA990	
	Standard version	version with double load cap.	Standard version	version with double load cap.	Standard version	version with double load cap.	Standard version	version with double load cap.	Standard version	version with double load cap.
Load Capacity	250kg	500kg	300kg	600kg	350kg	700kg	400kg	800kg	495kg	990kg
Lifting height	12m	6m	12m	6m	12m	6m	12m	6m	12m	6m
Lifting speed	10m/min	5m/min	10m/min	5m/min	8m/min	4m/min	8m/min	4m/min	8m/min	4m/min
Cable length	12.5m		12.5m		12.5m		12.5m		12.5m	
Cable diameter	4.2mm		4.5mm		5.1mm		5.1mm		5.6mm	
Cable break resistance	⩾1300kg		⩾1600kg		⩾2000kg		⩾2000kg		⩾2500kg	
Service	S_3 20%-10min		S_3 20%-10min		S_3 20%-10min		S_3 20%-10min		S_3 20%-10min	
Main voltage	230V~50Hz		230V~50Hz		230V~50Hz		230V~50Hz		230V~50Hz	
Motor performance	P_1 1020W		P_1 1200W		P_1 1250W		P_1 1300W		P_1 1600W	

These descriptions and illustrations are non-binding. The company reserves the right to modify them without notice.

